SHARP

LM24014H

Medium Size Graphic Type LCD Module

Features

- 13 cm [5.2"] STN
- Transflective Type
- EL backlight is optionally available
- Wide temperature range
  Topr : 0 to +45°C, Tstg : -25 to +60°C

Specifications

Parameter		Unit
Display size	13 [5.2]	cm ["]
Dot format (H x V)	240 x 64	dot
Dot pitch (H x V)	0.53 x 0.53	mm
Active area (H x V)	127.2 x 33.9	mm
Panel type	STN	-
Panel mode	Transflective	-
Color	Gray	color
Contrast ratio	7 : 1	-
Response time	450 [-]	ms

Parameter		Unit
Brightness	-	cd/m^2
Duty ratio	1/64	-
Backlight type	EL	-
Power consumption Panel	75	mW
Backlight	-	mW
Outline dimensions (W x H x D)	180.0 x 65.0 x 10.5	mm
Weight	120	g
Operating temperature	0 to +45	°C
Storage temperature	-25 to +60	°C

Remark: Built-in LCD controller/CG-ROM

Outline Dimensions
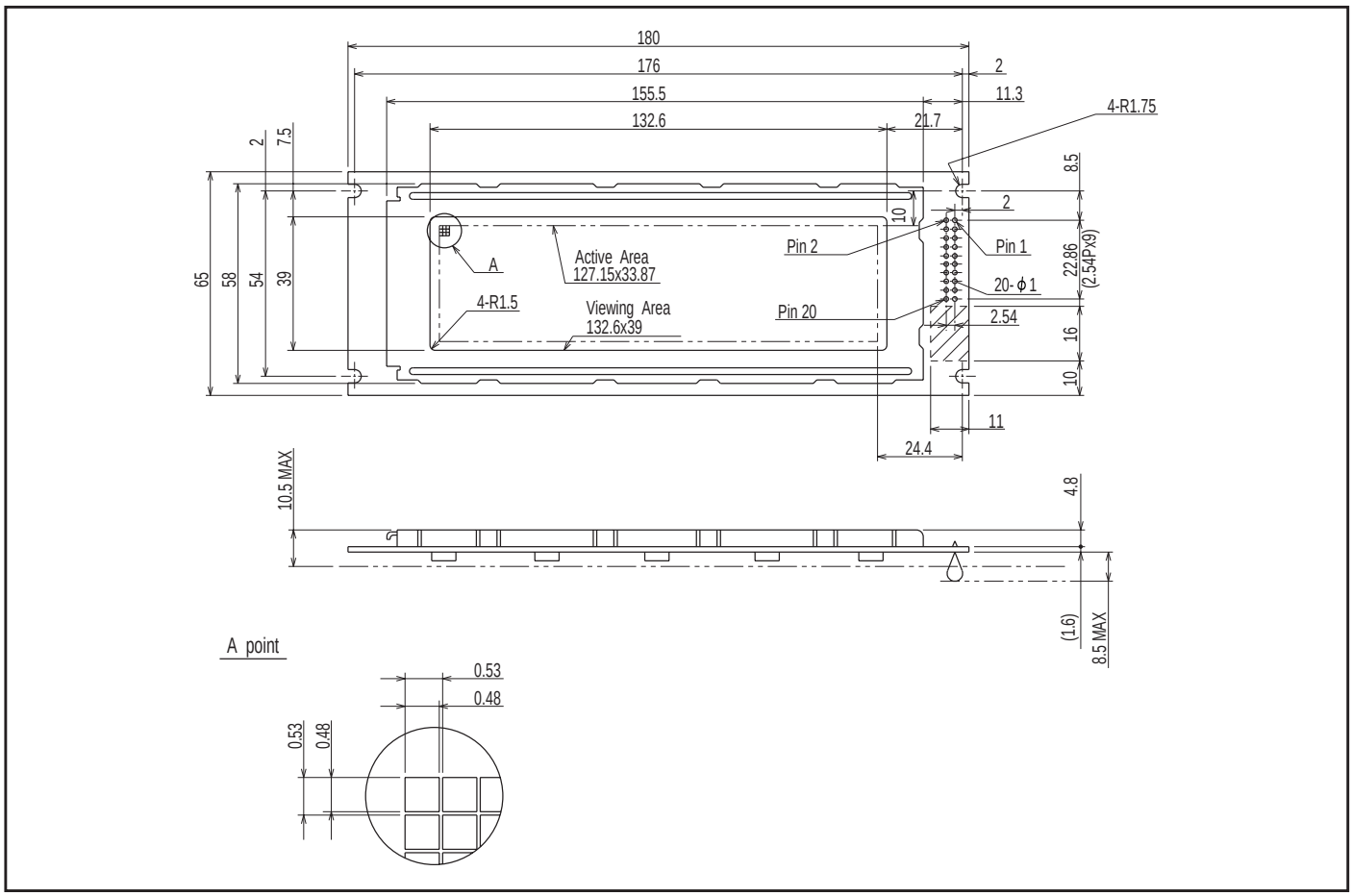
unit : mm